Climate and pressure chamber for simulation of flight conditions

J. Schröter[1], D. Steinbarth[2], C. Bauer[3]
Ulm University, Institute of Energy Conversion and Storage, Albert-Einstein-Allee 47, 89081 Ulm, Germany

U. Reichmann[4]
Rovak GmbH, Zum Teich 4, 01723 Grumbach, Germany

J. Kallo[5], C. Willich[6]
Ulm University, Institute of Energy Conversion and Storage, Albert-Einstein-Allee 47, 89081 Ulm, Germany

I. Abstract

To test single electronic components and complete hybrid-electric drive trains for airplane and other mobile applications under realistic operating conditions a climate chamber was set up at the Institute for energy conversion and storage. The chamber can simulate climatic conditions corresponding to flight altitudes up to 5500 m with temperatures from -15 to 40 °C, pressures between 0.5 and 1 bar(a) and relative humidities from 10 to 100 %. A continuous stream of fresh air can be supplied to the chamber in order to facilitate measurements on fuel cells. The chamber is being used primarily for the characterization of electric motors, power electronics, power distribution systems and compressors.

II. Introduction and requirements

In the development of electric aircraft challenges come into play, which by far exceed those on ground. Not only are there additional constraints due to weight and space, but the changing ambient condition at various altitudes pose additional challenges for the development of this promising new technology. For aircrafts that are operational until an altitude of 5500 m the operating pressures vary between 1 and 0.5 bar, while the components are exposed to temperatures between 40°C on ground and -20°C at 5500 m as shown in Figure 1. Depending on weather conditions relative humidity can vary between 10 and 100%.

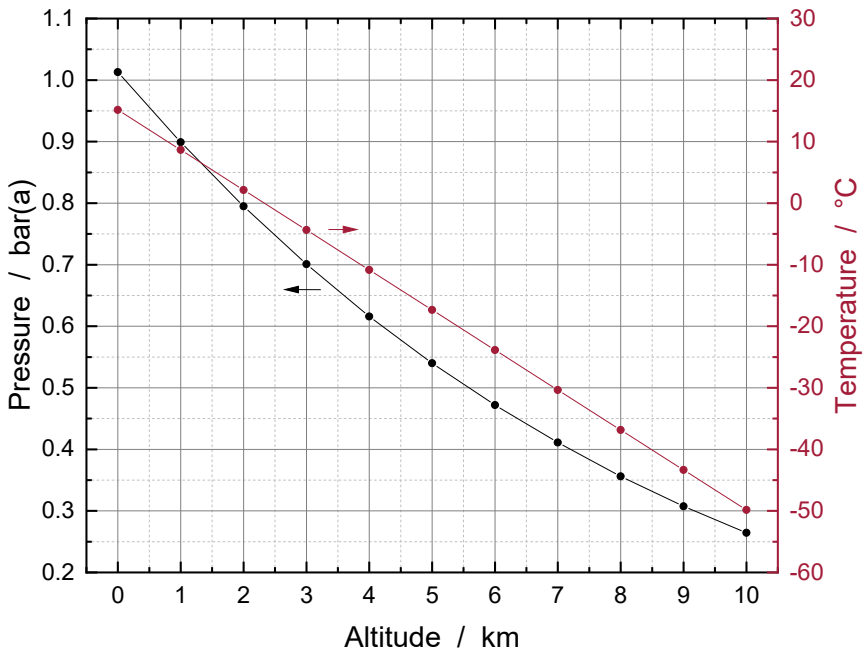

Figure 1: Pressure and Temperature at different altitudes (International Standard Atmosphere (ISA))

In the development of electric aircraft special attention has to be paid to the effects of those ambient conditions on the system. For instance, low ambient pressures lead to a higher risk of electrical discharges [1] and in case of fuel-cell powered systems the performance of the fuel cell is considerably lowered [2]. Extreme temperatures and temperature changes pose a challenges for performance and safety aspects of batteries [3], cooling systems and in addition are a strain on materials used.

In order to test components and entire systems for electric aircrafts a climate chamber was set up at the Institute for Energy conversion and storage at Ulm University, which simulates the relevant ambient air parameters of pressure, temperature and humidity that correspond to a flight altitude of 5500 m. Pressure inside the chamber can be varied between 1 bar and 0.5 bar while an air conditioning system enables temperatures between -15 °C and +40 °C and relative humidities of 10 % to 100 % depending on the air temperature.

The chamber is designed to accommodate the possible components of an electric or hybrid-electric power train like motor, power electronics, fuel cell and battery. To simulate the load on the propeller, the electric motor can be connected to a load machine outside the chamber. To enable single component testing, power connections to an electrical source and sink and feedthroughs for sensor and control cables are provided as well as connections to a cooling system including heat exchangers, pumps and pipes to provide cooling liquid with defined temperatures and volume flows to each of the components. The chamber is also connected to a hydrogen supply for the fuel cell stacks. As they may be part of the considered power train, the chamber can be supplied continuously with up to

600 m^3/h fresh air. This half-open system is necessary because fuel cells use oxygen from ambient air for power generation. In addition, continuous air flow prevents accumulation of dangerous substances (like H2) in the chamber.

III. Working principle of the climate chamber

The considered climate chamber mainly consists of two parts: The air conditioning plant, that provides conditioned air to the chamber and the chamber itself in which all components of the power train find place.

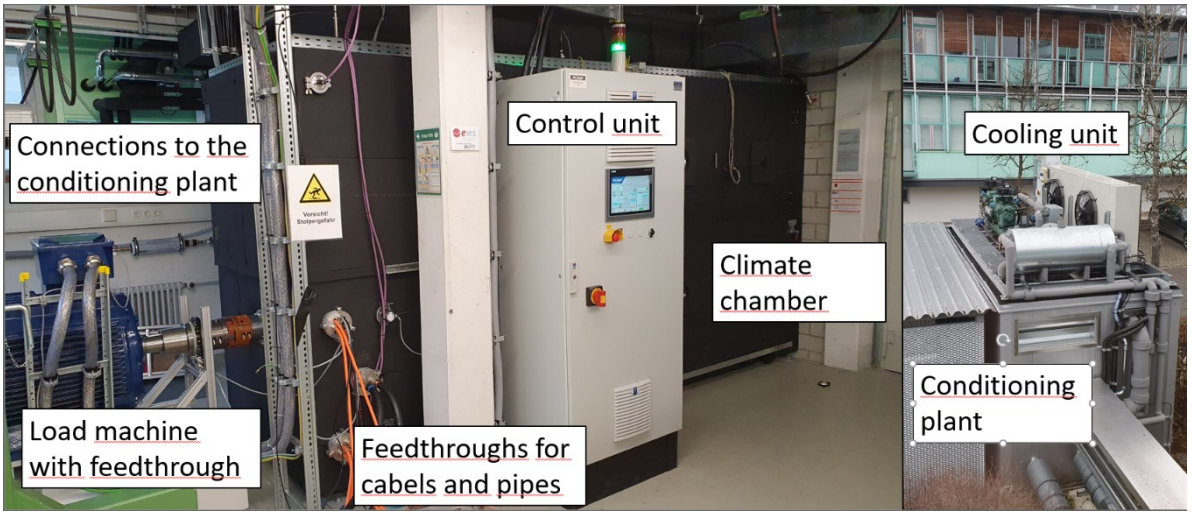

Figure 2: Photo of the climate chamber (left) and the conditioning plant (right)

The vacuum chamber (Figure 2) itself has a size of 4.3 x 2.2 x 1.3 m and is made of steel. Inside two levels are installed as shown in Figure 3. Each of the two levels can be accessed by several doors. The walls of the chamber are insulated with Armaflex on the outside and portholes provide a view into the LED illuminated chamber. Appropriate feedthroughs for power cables, sensor cables and cooling pipes are integrated in the chamber walls. A shaft feedthrough is used to couple electric motors inside the chamber with a load machine outside the chamber.

Conditioned air enters the chamber at the top on one side and leaves it at the side wall of the other side as shown in Figure 3. Hydrogen can be supplied to a fuel cell inside the chamber from an external supply.

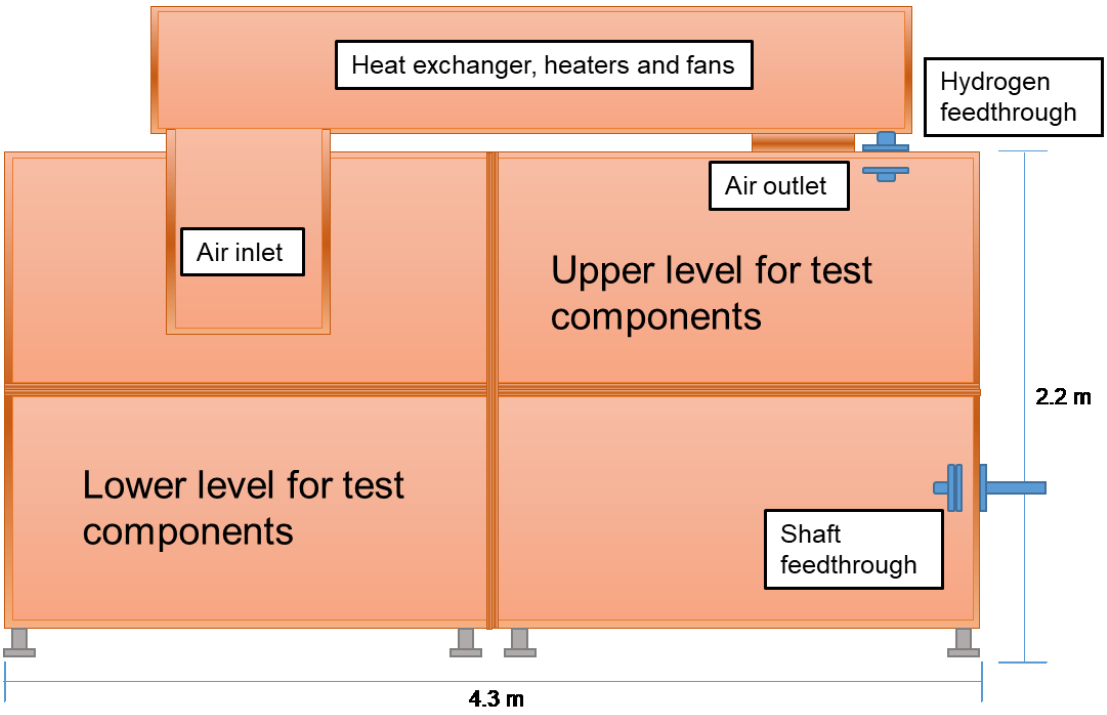

Figure 3: Schematic of the climate chamber

Pressure, temperature and humidity inside the chamber are controlled with the help of the air conditioning plant. Figure 4 shows a systematic of the air conditioning system of the chamber. Ambient air is cooled in a precooler consisting of a liquid to air intercooler before entering the adsorption dryer.

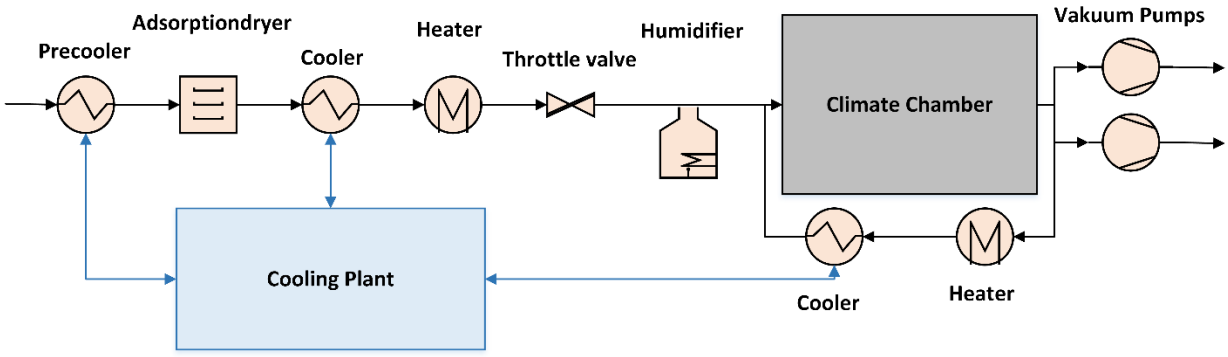

Figure 4: schematic of the air conditioning system for the climate chamber

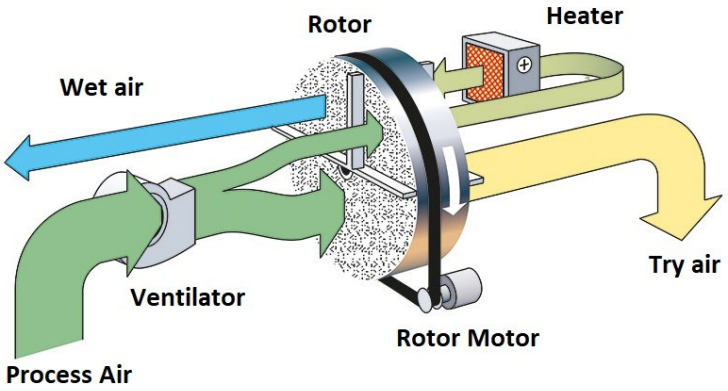

Figure 5: schematic drawing of the adsorption dryer [4]

The principle of the adsorption dryer is shown in Figure 5 [4]. It consists of a spinning wheel filled with adsorbent. Water vapor in the air stream is adsorbed on one half of the wheel, decreasing the humidity of the process air down to 10 % rH. On the other half of the wheel, hot air that passes the wheel and dries the adsorbent.

In the next step the dried air passes the main cooler which is a liquid to air intercooler. The cooling liquid is cooled by a 20 kW cooling unit on top of the conditioning plant (Figure 2). This cooling unit mainly consists of two compressors and a condenser which cool the refrigerant down to – 25 °C. A cooling pump transports the cooling liquid to and from the heat exchangers.

In case that warm air is required, electrical heaters after the cooler can warm up the process air up to 40 °C.

After these components, the supplied air passes a throttle valve which is responsible for the pressure control as it reduces the air flow into the chamber to the required amount. The chamber pressure can be varied between 500 mbar(a) and ambient pressure.

In the next step, a vaporizer humidifies the process air by vaporizing deionized water if this is required. Thus the air can be humidified up to dew point of 24 °C (40 % rH at 40 °C). Changes in rH are typically finished within two hours.

The conditioned air then enters the climate chamber. Part of the air that leaves the chamber is recirculated in an inner circulation loop consisting of a cooler and a heater further. This helps to adjusts the air temperature to the desired value and saves energy since the required heating or cooling power can be reduced (see Figure 3).

Two controllable vacuum pumps suck the air out of the chamber and provide the required air flow of up to 600 m^3/h through the system within seconds.

A custom-made software on a touch control unit shown in Figure 6 is used to control temperature, pressure and humidity in the chamber as well as the process air flow. In “auto mode” the desired temperature, pressure, humidity and airflow values can be chosen and the system sets the corresponding configurations for cooler or heater, dryer or humidifier, the vacuum pumps and the throttle valve by itself. In “manual mode” these settings can be adjusted manually. In this mode, the chamber pressure can be changed within seconds, what allows to simulate the start of an aircraft for this parameter.

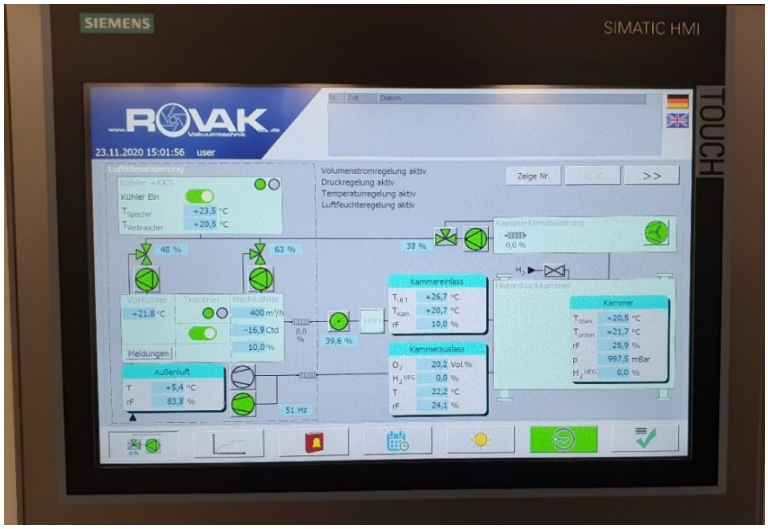

Figure 6: Climate Chamber control panel; a schematic flow diagram with relevant components and parameters can be seen in home screen

IV. Dynamic behavior of the chamber conditions

To show the dynamic behavior of the chamber conditions, exemplarily changes are tested.

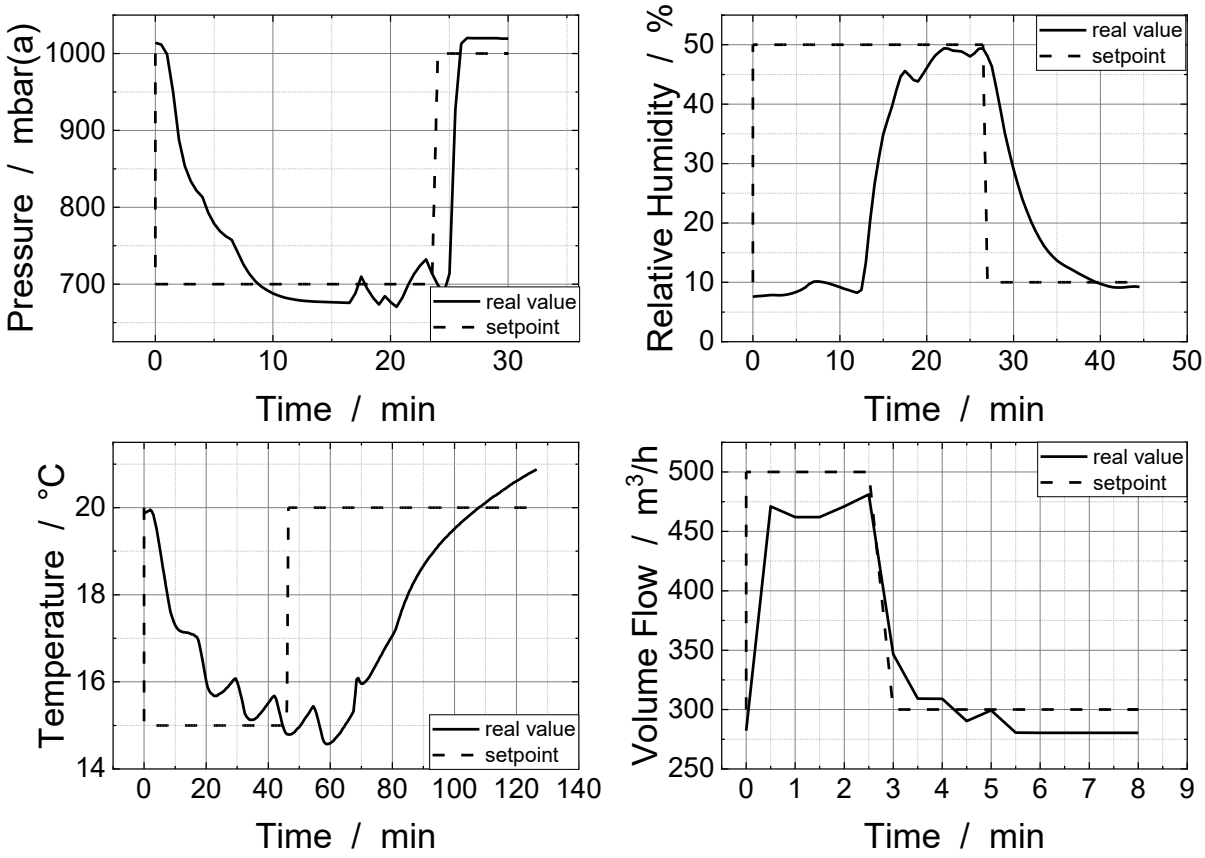

Figure 7: Measured values and target values for change of pressure, relative humidity, volume flow and temperature over time

Figure 7 shows the changes in pressure, relative humidity, volume flow and temperature over time. The target value for each parameter was varied separately while the other parameters were kept at chosen standard conditions: pressure 1000 mbar, relative humidity 10 %, volume flow 300 m^3/h and temperature 20 °C. At time = 0 min, the corresponding set values were changed represented by the dotted lines in Figure 7. Manual mode was used first to accelerate parameter changes and auto mode was used once the real value was close to the set value. After the desired value was reached, the set value was set to the respective standard value again to record changes in both ways, increase and decrease.

According to the measurements, change in volume flow from 300 to 500 m^3/h takes less than 2 minutes in each direction. Decreasing the pressure from 1000 mbar to 700 mbar takes around 20 minutes while pressure increase to ambient pressure takes less than 3 minutes. This increase in pressure to ambient is faster, because the throttle valve was opened completely and no regulation was necessary. Changes in relative humidity from 10 % to 50 %

take around 20 minutes in both directions. The longest time is needed for changes in temperature. Changing the air temperature in the chamber from 20 °C to 15 °C and back takes around one hour in each direction.

The performed changes give a realistic impression of the time span needed for changes. Volume flow variations typically take place within minutes, variations of the chamber pressure and humidity are typically finished after tens of minutes, and changes in temperature take several hours depending on the desired change. The long time span for temperature changes results from the high thermal mass of the steal chamber which is heated or cooled alone by the process air.

As the real values overshoot, stay behind the set values or fluctuate, exemplarily shown for the measurement in Figure 7, the parameters for the control of the parameters need to be further optimized.

V. Challenges and outlook

After the chamber and the air conditioning plant were set up, a maximum noise level of 59 db(A) was measured next to the installation because of the vacuum pumps and the compressors of the cooling unit. By integrating a noise cover for the cooling unit, silencers for the vacuum pumps and decoupling of vibrating components the maximum noise level is decreased by about 10 dB.

When taking the chamber into operation it was found that in case of a fast warm up water condenses at the cold chamber walls. When the temperature difference between the chamber walls and the incoming air was higher than about 10 °C. This even occurred for a setpoint of 0 % rH. Restricting the allowed temperature changes per time to 10 ° C per hour solved this problem. Similarly condensing and freezing at the outer chamber walls occurred at low chamber temperatures and led to corrosion. This problem was mostly solved by the isolation layer on the chamber walls and the hinges and feedthroughs were rubbed with oil to prevent corrosion.

Two upgrades are planned for the future: With an upgrade of the cooling unit, it will be possible to reach -20 °C chamber temperature instead of -15 °C. In addition, the climate chamber technically is designed for 200 mbar(a) pressure, which corresponds to 10 km altitude. Chamber pressures below 500 mbar(a) will be enabled with a future software update.

VI. Conclusion

At the Institute of Energy Conversion and Storage and Storage, a climate chamber was set up to test single components and entire power trains for hybrid-electric airplane and other mobile applications under realistic operating conditions. The chamber is able to simulate relevant conditions up to 5500 m altitude with temperatures from -15 to 40 °C, pressures between 0.5 and 1 bar(a) and humidities from 10 to 100 %. 0 – 600 m^3/h of conditioned ambient air can be supplied to the chamber to provide sufficient fresh air for tests on fuel cell systems up to powers of 100 kW. The air is conditioned in a conditioning plant set up in a container. To adjust the temperature, a 20 kW cooling plant and heaters are implemented. The chamber pressure is controlled with a throttle valve and the humidity is adjusted with an adsorption dryer and a vaporizer. To connect sensors, hydrogen supply, cooling pipes, power cables and a load machine, appropriate feedthroughs are implemented.

During commissioning noise and process challenges were solved and the chamber is functional apart from very low temperatures. It has already been successfully used for the characterization of electric motors, power electronics, power distribution systems and compressors [5].

Acknowledgements

The authors want to thank the German Federal Ministry of Transport and Digital Infrastructure for funding as part of the project Go4H2 (03B10702A and 03B10702A2) and the German Federal Ministry for Economic Affairs and Energy for funding as part of the project HighV (20Y1701B).

References

[1] Paschen, F., “Ueber die zum Funkenübergang in Luft, Wasserstoff und Kohlensäure bei verschiedenen Drucken erforderliche Potentialdifferenz,” *Annalen der Physik*; Vol. 273, No. 5, 1889, pp. 69–96. doi: 10.1002/andp.18892730505.

[2] Werner, C., Gores, F., Busemeyer, L., Kallo, J., Heitmann, S., and Griebenow, M., “Characteristics of PEMFC operation in ambient- and low-pressure environment considering the fuel cell humidification,” *CEAS Aeronautical Journal*; Vol. 6, No. 2, 2015, pp. 229–243. doi: 10.1007/s13272-014-0142-z.

[3] Ma, S., Jiang, M., Tao, P., Song, C., Wu, J., Wang, J., Deng, T., and Shang, W., "Temperature effect and thermal impact in lithium-ion batteries: A review," *Progress in Natural Science: Materials International*; Vol. 28, No. 6, 2018, pp. 653–666. doi: 10.1016/j.pnsc.2018.11.002.

[4] HEYLO, "Bedienungsanleitung Luftentfeuchter AT 20/AT 30," [online], Vol. 2011, www.heylo.de, [retrieved 22 March 2021].

[5] Schröter J, Graf T, Frank D, Bauer C, Kallo J, Willich C, "Influence of pressure losses on compressor performance in a pressurized fuel cell air supply system for airplane applications," *International Journal of Hydrogen Energy, accepted*, 2021.